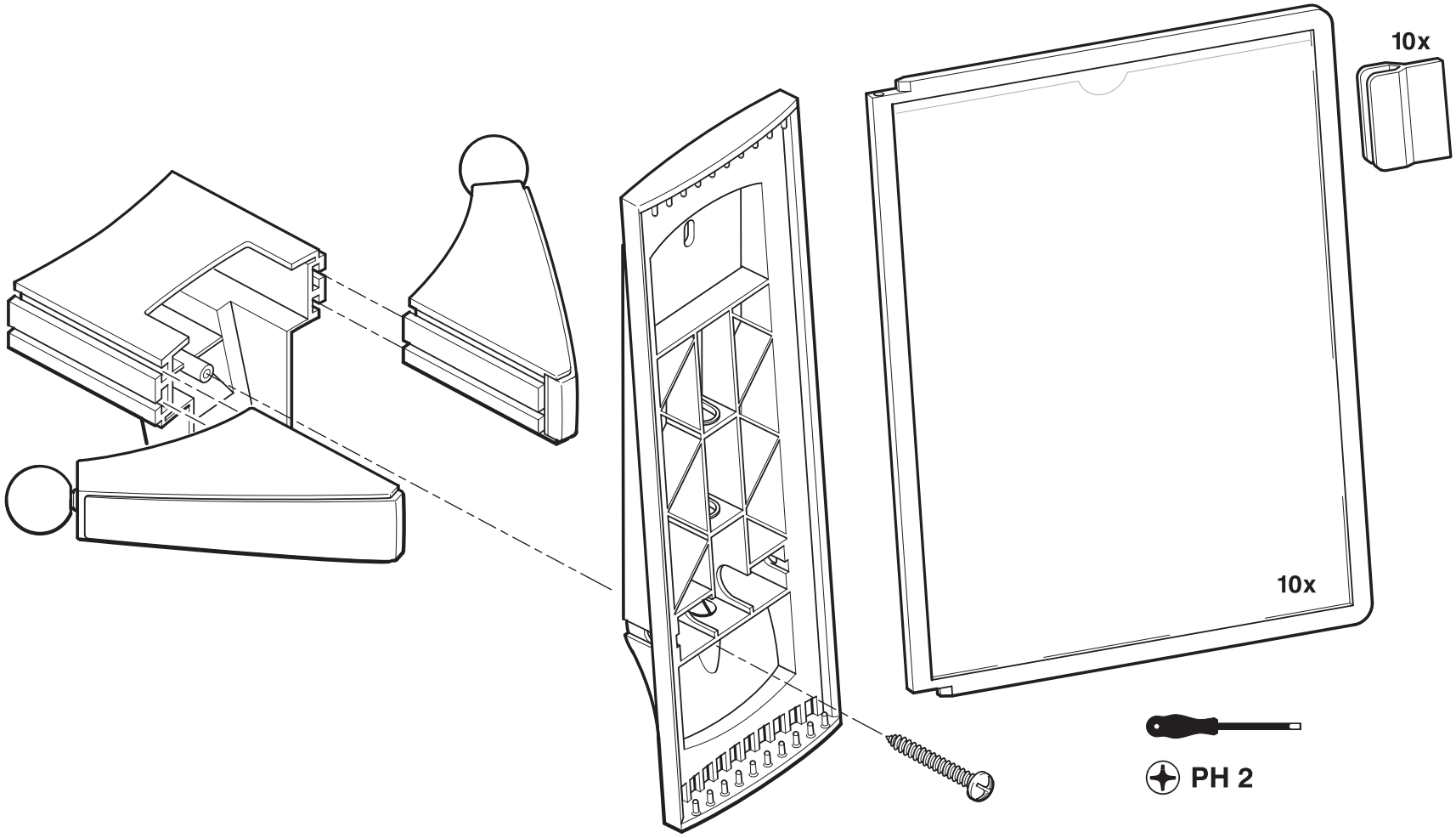
10x
10x
PH 2

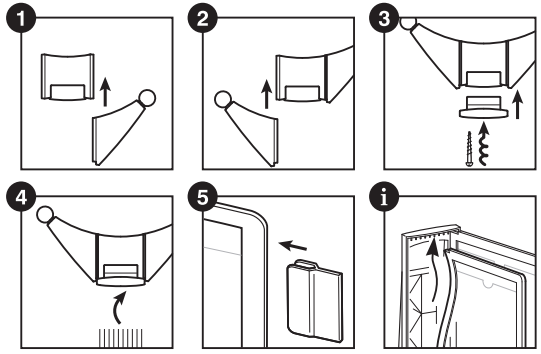
1
2
3
4
5
i

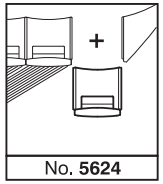
No. 5624